Item Number
RAM-VB-101

RAM No-Drill Seat Bases

National Products, Inc.

Vehicle base for the

Chevy S10 (1995-Newer)
S10 Blazer (1995-Newer)
GMC Sonoma (1995-Newer)
Jimmy (1995-Newer)

Shown In Use

SPECIFICATIONS

Placement
Passenger side floor board, in front of seat

Drilling Required
None - uses existing seat bolts
Chevy S10 (1995-Newer)
S10 Blazer (1995-Newer)
GMC Sonoma (1995-Newer)
Jimmy (1995-Newer)

Seat Configuration
Bucket

Pole or Pedestal
Sold Separately

Construction/Finish
Steel/Black Powdercoat

Weight
10.7 lbs.

Dimensions
A = 16.25", B = 6.75", C = 3.75", D = 7.75"

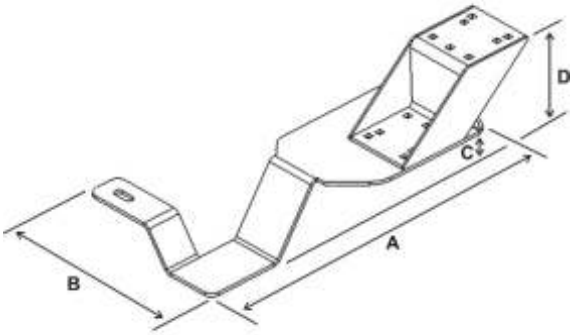

RAM-VB-101, SHOWN WITH
RAM-VB-SB4 RISER (INCLUDED)

Features

Quick installation with no drilling needed
Angled step moves mount away from passenger leg space
Levers, console, or 4WD shifter not interfered with

Misc.

One Offset Universal Mount Riser is already included with this vehicle base.

Step feature allows optimized placement of mount with a minimal amount of intrusion of passenger leg space.

National Products, Inc.
Phone: 206-763-8361
Fax: 206-763-9615
Address: 1205 S Orr St
Seattle, WA 98108
Website: www.ram-mount.com
Email: staff@ram-mount.com

This document, including images, may not be reproduced partly or fully without the expressed written consent of National Products, Inc.

Item Number
RAM-VB-101

RAM No-Drill Seat Bases

National Products, Inc.

Vehicle base for the

Chevy S10 (1995-Newer)
S10 Blazer (1995-Newer)
GMC Sonoma (1995-Newer)
Jimmy (1995-Newer)

INSTALLATION INSTRUCTIONS

1. Attach the RAM-VB-SB4 riser with 5/16” carriage bolts, flat washer, lock washers, and nuts.

2. Remove the two front seat bolts that connect the passenger seat to the floor.

3. Tilt the front of the passenger seat upward and slide the no drill base under the seat until the slots in the base line up with the seat bolt holes.

4. Lower the seat back down into position.

5. Install the two front seat bolts.

National Products, Inc.
Phone: 206-763-8361
Fax: 206-763-9615
Address: 1205 S Orr St
Seattle, WA 98108
Website: www.ram-mount.com
Email: staff@ram-mount.com

This document, including images, may not be reproduced partly or fully without the expressed written consent of National Products, Inc.